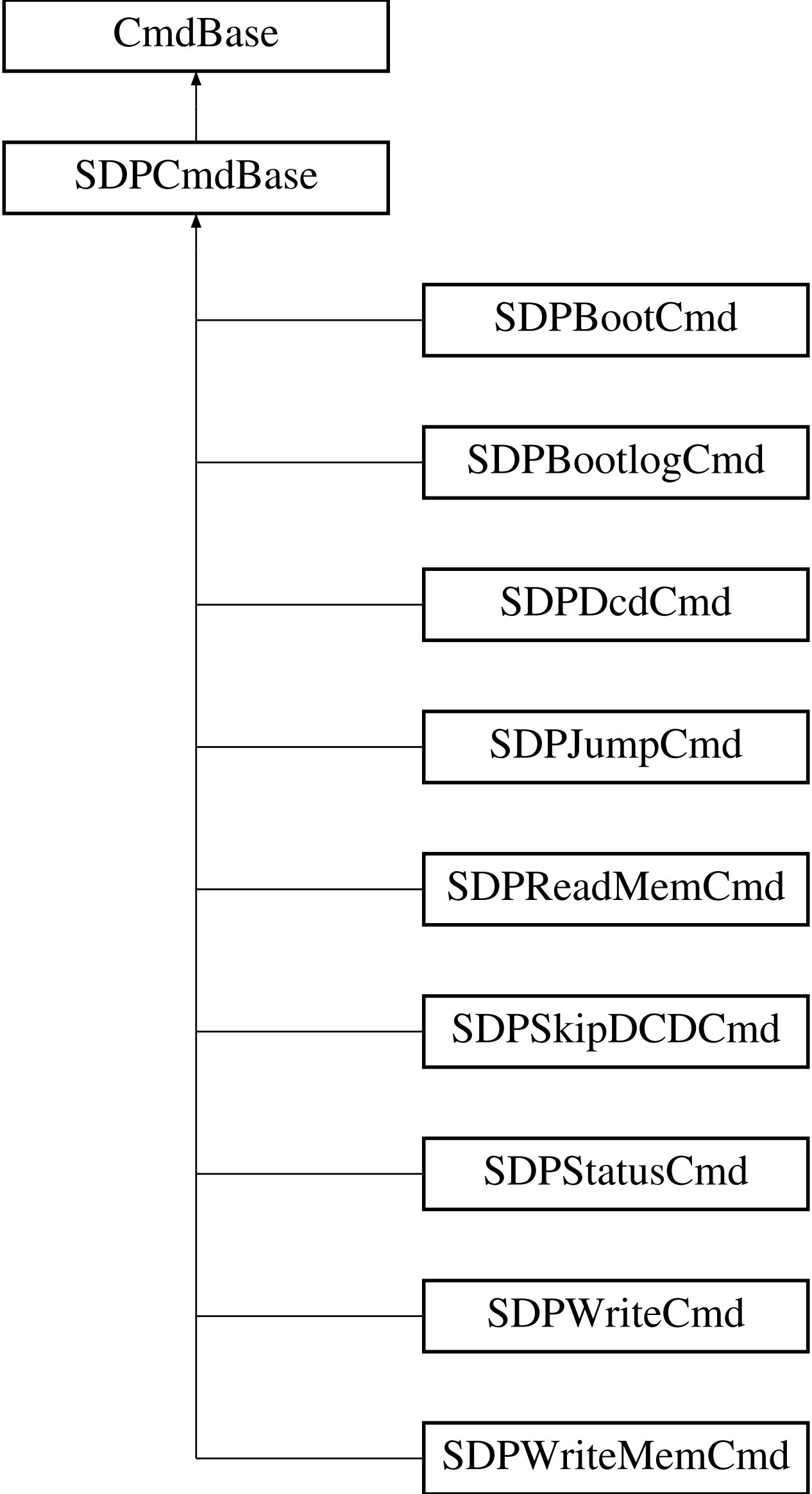
CmdBase
SDPCmdBase
SDPBootCmd
SDPBootlogCmd
SDPDcdCmd
SDPJumpCmd
SDPReadMemCmd
SDPSkipDCDCmd
SDPStatusCmd
SDPWriteCmd
SDPWriteMemCmd