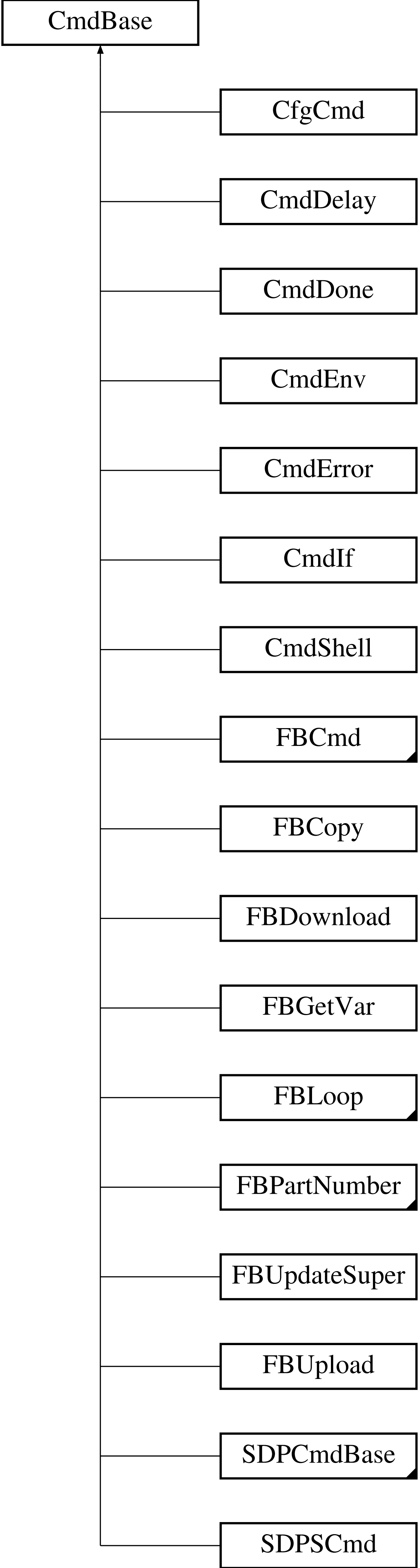
CmdBase
CfgCmd
CmdDelay
CmdDone
CmdEnv
CmdError
CmdIf
CmdShell
FBCmd
FBCopy
FBDownload
FBGetVar
FBLoop
FBPartNumber
FBUpdateSuper
FBUpload
SDPCmdBase
SDPSCmd